APPLICATION REPORT
PROCESS ANALYSIS
LDO OPTICAL OXYGEN PROBE
PAPER INDUSTRY

LDO offers 80 % less maintenance within paper industry

For many years there has been a strong trend towards resource conserving production in order to cut water consumption in the paper industry. Nevertheless, in 2004 an average of 9.6 litres of wastewater was generated per kilogram of paper in Germany. Several paper mills, which together account for more than 75 % of the gross production volume, use biological processes to treat their wastewater.

In Neuss, Germany, Procter & Gamble (TEMPO paper handkerchiefs, etc.) has Europe's biggest factory for paper-based hygiene products. Its biological wastewater treatment plant became operational in 1994. The ➔*reliable aeration* control system uses the LDO optical ➔*oxygen sensor*. This ➔*H_2S resistent* sensor enabled the monthly maintenance time to be reduced by 80 %.

Author: Dirk Ritterbach
- Head of Utilities Dept.
- Procter & Gamble Manufacturing GmbH, Neuss, Deutschland

Optimal aeration control system for reliable outflow values

Fig. 1: Oxidation ditch with central final settlement tank

Fig. 2: LDO oxygen sensor in use

The biological wastewater treatment plant at Procter & Gamble

"Water and auxiliaries", was the short but comprehensive answer to the question about the inflow stream to the biological treatment plant, which has been in operation at Procter & Gamble in Neuss since 1994. The volume of wastewater has been considerably reduced in the last four years, as prevention is far more cost-efficient than disposal.

The factory's water is supplied by its own wells, while the wastewater is disposed of directly into the Rhine (450 m away) after passing through the factory's own wastewater treatment plant (settlement tank with surrounding oxidation ditch) and an outflow. Direct dischargers have to fulfill considerable responsibilities, and can be inspected without prior notice at any time by the State Environmental Office (StUA). Such inspections hold no fears, as screens and polymer based flocculants ensure initial degradation at the primary settlement stage. In the coagulator, a 380 m^3 stilling basin, the flocculated material and paper fibres are removed from the wastewater stream after sedimentation.

Aeration control using LDO

For two and a half years an LDO sensor has monitored the oxygen concentration in the downstream oxidation ditch and regulated it with the help of rotor aerators.

The target value is between 1 and 4 mg/l – depending on the wastewater that is to be treated, whose composition is subject to productrelated fluctuations.

Over 80% less maintenance time through LDO

The decision in favour of this optical oxygen meter was not particularly difficult, as the maintenance requirement and lifetime of the previously used membrane based electrode no longer measured up to the needs of today. Thanks to LDO, the former 10 to12 hours per month for cleaning and calibration were cut to two hours for cleaning and inspections (Fig. 4). The LDO does not have to be calibrated. A direct comparison between membrane technology and the optical method of measuring oxygen in this plant showed a cut of more than 80 % in maintenance time. Another negative aspect of the previous electrodes

Technical data
Biological wastewater treatment plant

Commissioned	1994
Design capacity	200 m^3/h
Process technology	Biological treatment with oxidising ditch, with central final settlement tank, rotor aerators, 3.5-4 g/l TS, oxygen control via LDO between 1 and 4 mg/l O_2
Oxygen measurement	LDO
In operation	Since 2004
Calibration	Not necessary
Cleaning and inspection	Once weekly, 2 h per month

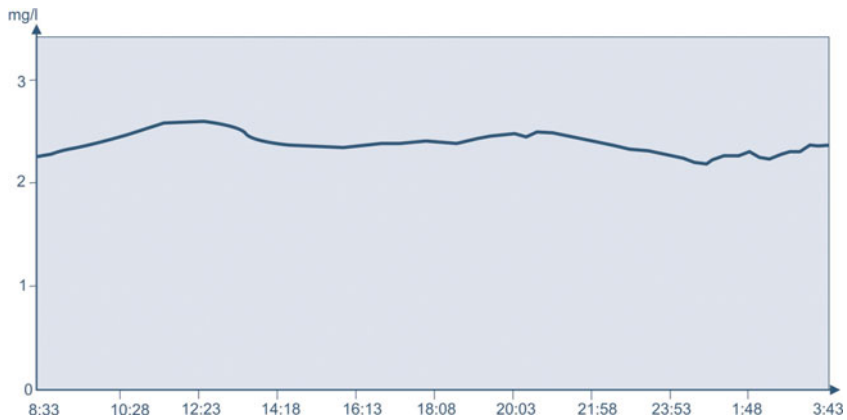

Fig. 3: Typical time course curve for dissolved oxygen

was the fact that H_2S related deposits caused frequent tears in the membranes. The optical method makes no use of membranes and is therefore not affected by this problem.

At the end there is a clear result

A direct comparison between the inflow and outflow streams of the treatment plant and between the turbid influent mixture of water, paper fibres and auxiliaries and the fully transparent outflow stream yields a clear result (Fig. 5). The concentrations of the "dissolved" parameters in the outflow stream also confirm the corresponding quality of the discharged water. This expensive type of treatment requires a reliable aeration control system based on low maintenance and above all H_2S resistant oxygen sensors.

Summary

The biological treatment of wastewater from the paper industry makes extremely high demands on the oxygen measurement technology. Low-maintenance probes which are resistant to chemical interferences, and especially to H_2S are required. The LDO oxygen probe has proved its suitability under these trying conditions, over a period of more than two and a half years at Procter & Gamble. Instrument downtime, intensive maintenance and calibration times are a thing of the past.

Fig. 5: Clear comparison wastewater samples at the start and end of the treatment

History of Procter & Gamble in Neuss

1960	Start of construction
1962	Official opening; first paper machine starts production of paper handkerchiefs
1972	Second paper machine starts production of toilet paper
1983	Official opening of distribution centre
1994	Acquisition of VP-Schickedanz AG by Procter & Gamble; construction of a biological wastewater treatment plant
1997	Construction and commissioning of the tissue & towel engineering building
1998	Automation of the pallet conveying system
1999	Start-up of the "TEMPO in a box" production plant
2000	Construction of a TEMPO development line
2001	First high-speed production line for TEMPO paper handkerchiefs
2003/04	Introduction of a modern warehouse management system; construction of another storage/production bay; second high speed production line for TEMPO paper handkerchiefs

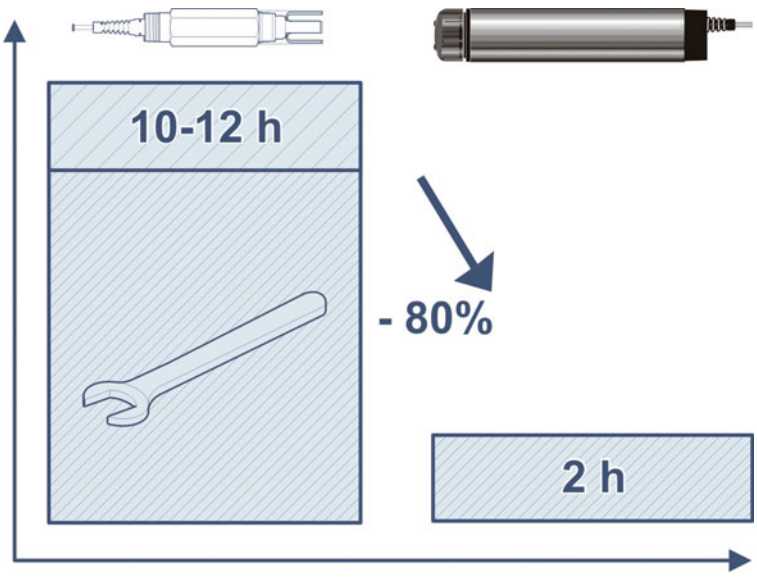

Fig. 4: Maintenance time per month with conventional oxygen sensor (left) and LDO (right)

Measurement technology

LDO oxygen sensor

Mechanically rugged sensor with 2 year warranty on the sensor cap. High degree of reliability due to permanently pre-programmed calibration data. High level of precision and accuracy thanks to energy rich incident blue light. More than 3 years experience with the technology	
Measurement principle	Luminescence
Measuring ranges	0.05-20.00 mg/l 0.05-20.00 ppm 0.5-200 % saturation
Resolution	0.01 mg/l, 0.01 ppm, 0.1 % saturation
Temperature range	0-50 °C
Min. approach flow	None
Calibration	Not necessary
Sensor material	Stainless steel 316, Noryl
Cable	10 m fixed cable with plug for connection to controller; maximum of 300 m via connector box and variable cable lengths
Display unit	SC 100 controller (model LXV401) or SC 1000 controller (model LXV400/LXV402)

SC 1000 controller system

A SC 1000 controller system consists of a single LXV402 display module and one or more LXV400 probe modules. It is modularly configured in accordance with customer specific requirements and can be upgraded at any time with more measurement stations, sensors, inputs and outputs and bus interfaces.	
Display module LXV402	The display module can be attached to any probe module and shows the data of the connected sensors on a colour display with touchscreen (in an SC 1000 network, from all sensors). Alarm and status messages can be optionally transmitted by GSM.
Probe module LXV400	The probe module is installed at a measurement point. Up to eight sensors can be connected to it. Probe modules can be connected together to create a SC 1000 network.

Subject to change.

HACH LANGE Services

Ordering, information and advice:
UK: +44 (0)161 872 14 87
IRL: +353(0)1 460 25 22
EU: +49 (0)211 52 88-0

On site technical support.

Showcasing latest technology and instruments in the HACH LANGE trailer.

www.hach-lange.com
up to date and secure, with downloads, information and e-shop.

Service packages and extended warranty up to 5 years.

Regular customer information by post and email.

Simple operation of the SC 1000 controller using a touchscreen

Schematic design of the LDO sensor with reference LED

LDO sensor with cap removed

DOC 043.52.00487.Apr07

HACH LANGE GMBH
Willstätterstraße 11
D-40549 Düsseldorf
Tel. +49 (0)2 11 52 88-0
Fax +49 (0)2 11 52 88-143
info@hach-lange.de
www.hach-lange.com

HACH LANGE LTD
Pacific Way
Salford
GB-Manchester, M50 1DL
Tel. +44 (0)161 872 14 87
Fax +44 (0)161 848 73 24
info@hach-lange.co.uk
www.hach-lange.co.uk

HACH LANGE LTD
Unit 1, Chestnut Road
Western Industrial Estate
IRL-Dublin 12
Tel. +353(0)1 460 25 22
Fax +353(0)1 450 93 37
info@hach-lange.ie
www.hach-lange.ie

HACH LANGE

UNITED FOR WATER QUALITY